S

NINA-B2 series

Stand-alone Bluetooth dual-mode modules

Data Sheet

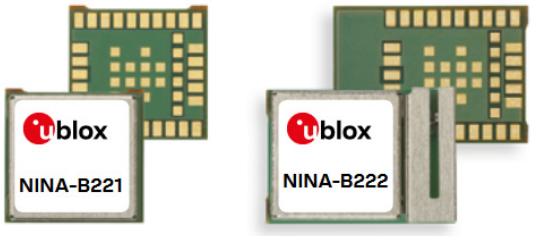

Abstract

This technical data sheet describes the NINA-B2 series stand-alone Bluetooth® dual-mode modules. The NINA-B2 modules come with pre-flashed application software, Bluetooth dual-mode (Bluetooth BR/EDR and Bluetooth low energy). The module has a number of important security features embedded, including secure boot, which ensures that only authenticated software can run on the module. This makes NINA-B2 ideal for critical IoT applications where security is important.

www.u-blox.com

UBX-18006649 - R03

Document Information

Title	**NINA-B2 series**	
Subtitle	Stand-alone Bluetooth dual-mode modules	
Document type	Data Sheet	
Document number	UBX-18006649	
Revision and date	R03	14-Dec-2018
Disclosure Restriction		

Product status	**Corresponding content status**	
Functional Sample	Draft	For functional testing. Revised and supplementary data will be published later.
In Development / Prototype	Objective Specification	Target values. Revised and supplementary data will be published later.
Engineering Sample	Advance Information	Data based on early testing. Revised and supplementary data will be published later.
Initial Production	Early Production Information	Data from product verification. Revised and supplementary data may be published later.
Mass Production / End of Life	Production Information	Document contains the final product specification.

This document applies to the following products:

Product name	**Type number**	**u-blox connectivity software version**	**Hardware version**	**PCN reference**	**Product status**
NINA-B221	NINA-B221-00B-00	1.0.0	06	N/A	Advance Information
NINA-B222	NINA-B222-00B-00	1.0.0	06	N/A	Advance Information

u-blox or third parties may hold intellectual property rights in the products, names, logos and designs included in this document. Copying, reproduction, modification or disclosure to third parties of this document or any part thereof is only permitted with the express written permission of u-blox.
The information contained herein is provided “as is” and u-blox assumes no liability for its use. No warranty, either express or implied, is given, including but not limited to, with respect to the accuracy, correctness, reliability and fitness for a particular purpose of the information. This document may be revised by u-blox at any time without notice. For the most recent documents, visit www.u-blox.com.
Copyright © u-blox AG.

Contents

Document Information **2**
Contents **3**
1 Functional description **6**
1.1 Overview 6
1.2 Applications 6
1.3 Product features 7
1.4 Block diagram 8
1.5 Product variants 8
1.5.1 NINA-B221 8
1.5.2 NINA-B222 8
1.6 Radio performance 9
1.7 Software options 9
1.7.1 AT command support 9
1.7.2 Software upgrade 9
1.8 MAC addresses 9
1.9 Power modes 10
2 Interfaces **11**
2.1 Power supply 11
2.1.1 Module supply input (VCC) 11
2.1.2 Digital I/O interfaces reference voltage (VCC_IO) 11
2.2 Module reset 11
2.3 Boot strapping pins 11
2.4 RF antenna interface 12
2.4.1 Internal antenna 12
2.4.2 External RF antenna interface 12
2.5 IO signals 13
2.5.1 System status IO signals 13
2.5.2 System control IO signals 13
2.5.3 UART IO signals 13
2.6 Data interfaces 14
2.6.1 UART 14
3 Pin definition **15**
3.1 Pin assignment 15
4 Electrical specifications **17**
4.1 Absolute maximum ratings 17
4.1.1 Maximum ESD ratings 17
4.2 Operating conditions 17
4.2.1 Operating temperature range 17
4.2.2 Supply/Power pins 18
4.2.3 RESET_N pin 18

4.2.4 Digital pins 18
4.2.5 Current consumption 19
4.2.6 Bluetooth radio characteristics 19
4.2.7 Bluetooth low energy characteristics 19
5 Mechanical specifications 20
5.1 NINA-B221 Mechanical specification 20
5.2 NINA-B222 Mechanical specification 21
6 Qualification and approvals 22
6.1 Country approvals 22
6.2 European Union regulatory compliance 22
6.2.1 Radio Equipment Directive (RED) 2014/53/EU 22
6.2.2 Compliance with the RoHS directive 22
6.3 FCC/IC Compliance 22
6.3.1 FCC Compliance 22
6.3.2 FCC statement 22
6.3.3 RF-exposure statement 23
6.3.4 End-product user manual instructions 23
6.3.5 End-product labeling requirements 24
6.3.6 End-product compliance 25
6.4 Japan radio equipment compliance 25
6.5 NCC Taiwan compliance 25
6.5.1 Taiwan NCC Warning Statement 25
6.5.2 NINA-B221 labeling requirements for end product 26
6.5.3 NINA-B222 labeling requirements for end product 26
6.6 KCC South Korea compliance 26
6.7 Safety compliance 26
6.8 Bluetooth qualification information 27
7 Antennas 28
7.1 Antenna accessories 29
7.2 Approved antennas 29
7.2.1 Single band antennas 29
7.2.2 Dual-band antennas 33
8 Product handling 34
8.1 Packaging 34
8.1.1 Reels 34
8.1.2 Tapes 34
8.2 Moisture sensitivity levels 35
8.3 Reflow soldering 36
8.4 ESD precautions 36
9 Labeling and ordering information 37
9.1 Product labeling 37
9.2 Explanation of codes 38

9.3 Ordering information 38
Appendix **39**
A Glossary **39**
Related documents **40**
Revision history **40**
Contact **41**

1 Functional description

1.1 Overview

The NINA-B2 series are small, stand-alone Bluetooth dual-mode modules designed for ease-of-use and integration in professional applications. The modules are delivered with u-blox connectivity software that provides support for both peripheral and central roles, Serial Port Profile, GATT client and server, beacons, u-blox Bluetooth low energy Serial Port Service – all configurable from a host using AT commands.

The NINA-B2 modules provide top grade security, thanks to secure boot, which ensures the module only boots up with original u-blox software. Intended applications include industrial automation, wireless-connected and configurable equipment, point-of-sales, and health devices.

NINA-B222 comes with an internal antenna while NINA-B221 has a pin for use with an external antenna.

NINA-B2 complies with RED standards and is certified as a modular transmitter in the following countries: US (FCC), Canada (IC / ISED RSS), Japan (MIC), Taiwan (NCC), South Korea (KCC), Australia / New Zealand (ACMA)[1], Brazil (Anatel)[1], South Africa (ICASA)[1]. The modules will be qualified according to ISO 16750 for professional grade operation, supporting an extended temperature range of –40 °C to +85 °C.

1.2 Applications

- Internet of Things (IoT)
- Bluetooth networks
- Telematics
- Point-of-sales
- Medical and industrial networking
- Access to laptops, mobile phones, and similar consumer devices
- Home/building automation
- Ethernet/Wireless Gateway

[1] Approvals are pending.

1.3 Product features

	NINA-B221	NINA-B222
Grade		
Automotive		
Professional	•	•
Standard		
Radio		
Bluetooth qualification	v4.2	
Bluetooth profiles	S, G	
Bluetooth BR/EDR	•	•
Bluetooth low energy	•	•
Bluetooth output power EIRP [dBm]	9	9
Max range [meters]	200	200
Antenna type	p	i
Application software		
u-blox connectivity software	•	•
Interfaces		
UART	1	1
GPIO pins	13	13
Features		
AT command interface	•	•
GATT server and client	•	•
Extended Data Mode	•	•
Low Energy Serial Port Service	•	•
Throughput [Mbit/s]	1.0	1.0
Maximum Bluetooth connections	7	7
Secure boot	•	•

S = SPP G = GATT p = Antenna pin i = Internal antenna

Table 1: NINA-B2 series main features summary

1.4 Block diagram

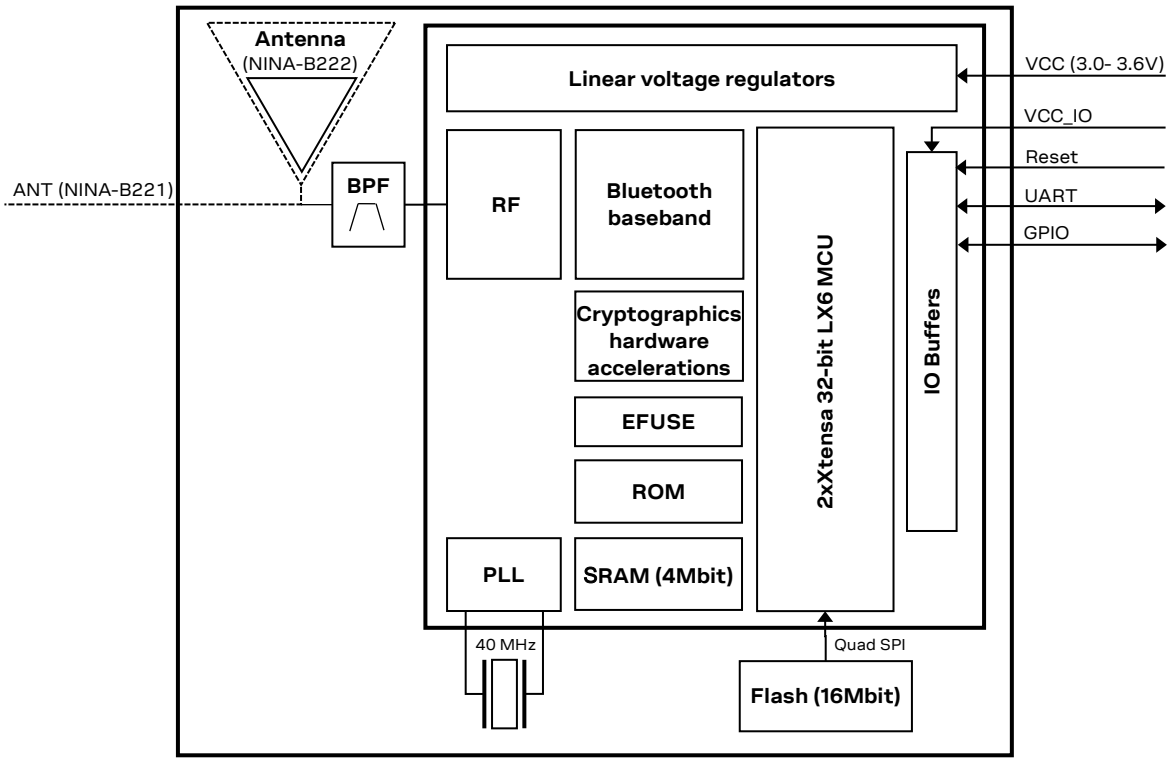

Figure 1: Block diagram of NINA-B2 series

1.5 Product variants

The NINA-B2 series modules come with pre-flashed application software, supporting Bluetooth BR/EDR and Bluetooth low energy v4.2. The host system can set up and control the module through the AT command interface. See u-blox Short Range AT Commands Manual [3] for more information about AT commands.

1.5.1 NINA-B221

The NINA-B221 modules do not use the internal antenna and thus the PCB outline has been trimmed to 10.0 x 10.6 mm. Instead of an internal antenna, the RF signal is available at a module pin for routing to an external antenna or antenna connector.

1.5.2 NINA-B222

The NINA-B222 modules use an integrated antenna mounted on the PCB (10.0 x 14.0 mm). The RF signal pin is not connected to any signal path.

1.6 Radio performance

The NINA-B221 and NINA-B222 modules support Bluetooth BR/EDR and Bluetooth low energy as explained in Table 2.

Bluetooth BR/EDR	Bluetooth low energy
Bluetooth v4.2+EDR Maximum number of slaves: 7	Bluetooth 4.2 BLE dual-mode
Band support 2.4 GHz, 79 channels	Band support 2.4 GHz, 40 channels
Typical conducted output power - 1 Mbit/s: 6 dBm - 2/3 Mbit/s: 8 dBm	Typical conducted output power 6 dBm
Typical conducted output power - 1 Mbit/s: 6 dBm - 2/3 Mbit/s: 8 dBm	Typical conducted output power 6 dBm
Typical radiated output power - 1 Mbit: 9 dBm EIRP* - 2/3 Mbit/s: 11 dBm EIRP*	Typical radiated output power 9 dBm EIRP*
Conducted sensitivity -88 dBm	Conducted sensitivity -88 dBm
Data rates: 1 / 2 / 3 Mbit/s	Data rates: 1 Mbit/s

* RF power including maximum antenna gain (3 dBi).

Table 2: NINA-B2 series Bluetooth characteristics

1.7 Software options

The NINA-B2 series modules come with the pre-flashed application software, supporting Bluetooth BR/EDR and Bluetooth low energy. The host system can set up and control the module through the AT command interface. The NINA-B2 modules provide top grade security, thanks to secure boot, which ensures the module boots up only with original u-blox software. This makes NINA-B2 ideal for critical IoT applications where security is important.

1.7.1 AT command support

You can configure the NINA-B221 and NINA-B222 modules with the u-blox s-center toolbox software using AT commands. See u-blox Short Range AT Commands Manual [3] for information about supported AT commands.

The s-center evaluation software supporting the AT commands is also available free of charge and can be downloaded from the u-blox website.

1.7.2 Software upgrade

Information on how to upgrade the software for NINA-B2 series is provided in section 2.5.2 and in the NINA-B2 series System Integration Manual [1].

1.8 MAC addresses

The NINA-B2 module series has four unique consecutive MAC addresses reserved for each module and the addresses are stored in the configuration memory during production. The first Bluetooth address is available in the Data Matrix on the label (see section 9.1).

MAC address	Assignment	Last bits of MAC address	Example
Module 1, address 1	Bluetooth	00	*D4:CA:6E:90:04:90*
Module 1, address 2	Reserved	01	*D4:CA:6E:90:04:91*
Module 1, address 3	Reserved	10	*D4:CA:6E:90:04:92*
Module 1, address 4	Reserved	11	*D4:CA:6E:90:04:93*
Module 2, address 1	Bluetooth	00	*D4:CA:6E:90:04:94*
Module 2, address 2	Reserved	01	*D4:CA:6E:90:04:95*
Module 2, address 3	Reserved	10	*D4:CA:6E:90:04:96*
Module 2, address 4	Reserved	11	*D4:CA:6E:90:04:97*

Table 3: Example MAC addresses assignment for two modules

1.9 Power modes

The NINA-B2 series modules are power efficient devices capable of operating in different power saving modes and configurations. Different sections of the module can be powered off when not needed and complex wake up events can be generated from different external and internal inputs.

See the u-blox Short Range AT Commands Manual [3] and NINA-B2 series System Integration Manual [1] for more information about power modes.

2 Interfaces

2.1 Power supply

The power for NINA-B2 series modules is supplied through **VCC** and **VCC_IO** pins by DC voltage.

☞ The system power supply circuit must be able to support peak power (add 20% as margin over the listed type current consumption), as during operation, the current drawn from **VCC** and **VCC_IO** can vary significantly based on the use cases.

2.1.1 Module supply input (VCC)

The NINA-B2 series modules use an integrated Linear Voltage converter to transform the supply voltage presented at the **VCC** pin into a stable system voltage.

2.1.2 Digital I/O interfaces reference voltage (VCC_IO)

All modules in the NINA-B2 series provide an additional voltage supply input for setting the I/O voltage level.

The separate **VCC_IO** pin enables integration of the module in many applications with different voltage levels (for example, 1.8 V or 3.3 V) without any level converters. The NINA-B2 modules support only 3.3 V as IO voltage level currently.

2.2 Module reset

The NINA-B2 series modules can be reset (rebooted) in one of the following ways:

- Low level on the **RESET_N** pin, which is normally set high by an internal pull-up. This causes “hardware” reset of the module. The **RESET_N** signal should be driven by an open drain, open collector or contact switch. When **RESET_N** is low (off), the chip works at the minimum power.

☞ The NINA-B2 series modules can be reset using an AT command (see the u-blox Short Range AT Commands Manual [3]). This causes a “software” reset of the module.

2.3 Boot strapping pins

There are several boot configuration pins available on the module that needs to have the correct settings during boot. It is important that they are in the default state (marked with bold in Table 4) during startup for normal operation. The default state is automatically selected (with internal pull-ups or pull-downs) if the pins are left unconnected.

Pin	State during boot	Default	Behavior	Description
36	0		VDD_SDIO=3.3V	Voltage of Internal Flash
	1	**10 kΩ pull-up**	**VDD_SDIO=1.8V (VDD_SDIO should always be 1.8 V)**	
27, 25	00		Download Boot	Booting Mode, see section 1.7 for information about software upgrade.
	01		Reserved, do not use	
	10	**Pull-up*, Pull-down***	**Normal Boot from internal Flash**	
	11		Normal Boot from internal Flash	
32	0		Silent	Debugging Log on U0TXD during booting
	1	**Pull-up***	**U0TXD Toggling**	
32, 28	00		Falling-edge input, falling-edge output	Timing of SDIO Slave
	01		Falling-edge input, rising-edge output	
	10		Rising-edge input, falling-edge output	
	11	**Pull-up*, Pull-up***	**Rising-edge input, rising-edge output**	

* About 30 kΩ

Table 4: NINA-B2 series boot strapping pins

2.4 RF antenna interface

The RF antenna interface of the NINA-B2 series supports Bluetooth BR/EDR and Bluetooth low energy on the same RF antenna signal. The module is equipped with a 2.4 GHz bandpass filter between the radio chip and RF antenna interface (see section 1.4).

The NINA-B2 series supports either an internal antenna (NINA-B222) or external antennas connected through an antenna pin (NINA-B221).

2.4.1 Internal antenna

The NINA-B222 module has an internal (embedded) 2.4 GHz PIFA antenna. The internal antenna is a PIFA antenna specifically designed and optimized for the NINA form factor.

Keep a minimum clearance of 5 mm between the antenna and the casing. Keep a minimum of 10 mm free space from the metal around the antenna including the area below. If a metal enclosure is required, use NINA-B221 and an external antenna.

It is recommended to place the NINA-B222 modules in such a way that the internal antenna is in the corner of the host PCB (the corner closest to Pin 16 should be in the corner). The antenna side (short side closest to the antenna), positioned along one side of the host PCB ground plane is the second best option. It is beneficial to have a large solid ground plane on the host PCB and have a good grounding on the NINA-B222 module. Minimum ground plane size is 24x30 mm but recommended is more than 50x50 mm.

See NINA-B2 series System Integration Manual [1] for more information about antenna related design.

⚠ The ANT signal is not available at the solder pins of the NINA-B222 module.

2.4.2 External RF antenna interface

The NINA-B221 module has an antenna signal (**ANT**) pin with a characteristic impedance of 50 Ω for using an external antenna. The antenna signal supports both Tx and Rx.

The external antenna, for example, can be an SMD antenna (or PCB integrated antenna) on the host board. An antenna connector for using an external antenna via a coaxial cable could also be

implemented. A cable antenna might be necessary if the module is mounted in a shielded enclosure such as a metal box or cabinet.

An external antenna connector (U.FL. connector) reference design (see NINA-B2 series System Integration Manual [1]) is available and must be followed to comply with the NINA-B2 FCC/IC modular approvals.

Also see the list of approved antennas (section 7.2).

2.5 IO signals

2.5.1 System status IO signals

The **RED**, **GREEN** and **BLUE** pins are used to signal the status. They are active low and are intended to be routed to an RGB LED. See *u-blox Short Range AT Commands Manual [3]* for more information about connectivity software signals IOs.

Mode	Status	RGB LED Color	GREEN	BLUE	RED
Data mode	IDLE	Green	LOW	HIGH	HIGH
Command mode	IDLE	Orange	LOW	HIGH	LOW
Data mode, Command mode	CONNECTING*	Purple	HIGH	LOW	LOW
Data mode, Command mode	CONNECTED*	Blue	HIGH	HIGH	LOW

* = LED flashes on data activity

Table 5: System status indication

2.5.2 System control IO signals

The following input signals are used to control the system (see u-blox Short Range AT Commands Manual [3] for more information about connectivity software signals IOs):

- **RESET_N** is used to reset the system. See section 2.5 for detailed information.
- If **SWITCH_2** is driven low during start up, the UART serial settings are restored to their default values.
- **SWITCH_2** can be used to open a connection to a peripheral device.
- If both **SWITCH_1** and **SWITCH_2** are driven low during start up, the system will enter the bootloader mode.
- If both **SWITCH_1** and **SWITCH_2** are driven low during start up and held low for 10 seconds, the system will exit the bootloader mode and restore all settings to their factory defaults.

2.5.3 UART IO signals

In addition to the normal **RXD**, **TXD**, **CTS,** and **RTS** signals, the NINA-B221/NINA-B222 software adds the **DSR** and **DTR** pins to the UART interface. Note that they are not used as originally intended, but to control the state of the NINA module. Depending on the current configuration, the **DSR pin** can be used to:

- Enter command mode
- Disconnect and/or toggle connectable status
- Enable/disable the rest of the UART interface
- Enter/wake up from sleep mode

2.6 Data interfaces

2.6.1 UART

The NINA-B221 and NINA-B222 modules include a 6-wire UART for communication with an application host processor (AT commands, Data communication, and software upgrades).

The following UART signals are available:

- Data lines (RXD as input, TXD as output)
- Hardware flow control lines (CTS as input, RTS as output)
- Link status (DTR as output, DSR as input). The DTR/DSR signals behavior is adapted to the u-blox connectivity software functionality and differs from the UART standard, see section 2.5.3 for additional information
- Programmable baud-rate generator allows most industry standard rates, as well as non-standard rates up to 921600 bps
- Frame format confiuration:
    - 8 data bits
    - Even or no-parity bit
    - 1 stop bit
- Default frame configuration is 8N1, meaning eight (8) data bits, no (N) parity bit, and one (1) stop bit.

3 Pin definition

3.1 Pin assignment

The pinout as shown in Figure 2 describes the pin configuration used in the NINA-B221 and NINA-B222 u-blox connectivity software modules.

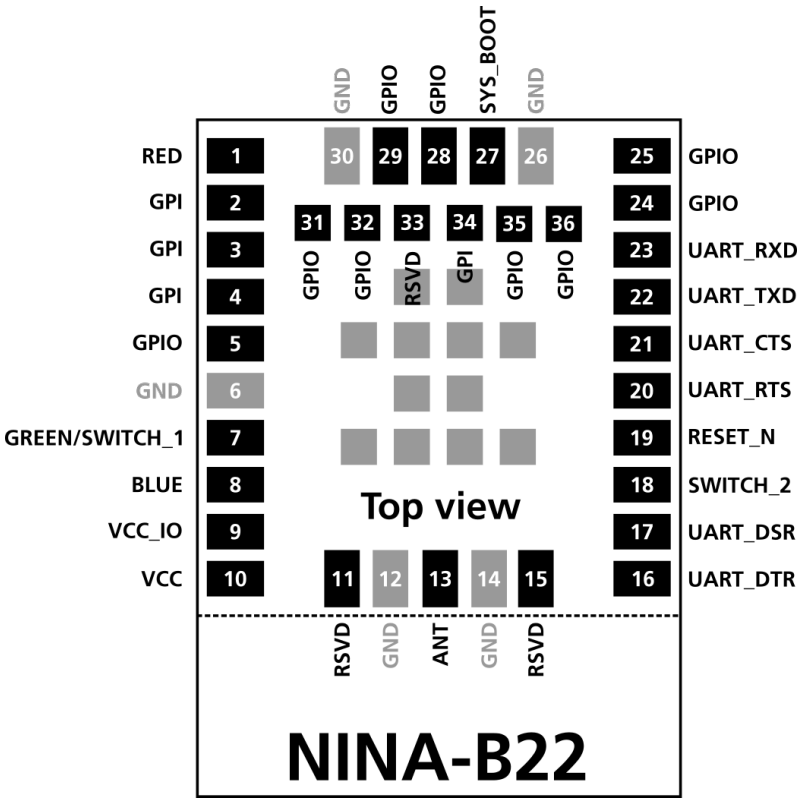

Figure 2: NINA-B22x pin assignment (top view)

☞ The grey pins in the center of the modules are GND pins. The lower part below the dotted line is the antenna part of NINA-B222 and the outline of the NINA-B221 module ends at this line.

☞ Some of the signals are boot strap signals (see Table 6). It is important that these signals are in the correct state during startup (see section 2.3).

Pin	Name	I/O	Description	Alt. Function	Remarks
1	RED	O	Logic Red LED Signal	GPIO_1	See section 2.5 for more info about IO functionality.
2	RSVD		Reserved for future use.	GPI_2	Do not connect.
3	RSVD		Reserved for future use.	GPI_3	Do not connect.
4	RSVD		Reserved for future use.	GPI_4	Do not connect.
5	RSVD		Reserved for future use.	GPIO_5	Do not connect.
6	GND		Ground		
7	GREEN/ SWITCH_1	I/O	GREEN: System status signal / SWITCH_1: Restore UART serial settings / Enter bootloader.	GPIO_7	Active low. See section 2.5 for more info about IO functionality.
8	BLUE	O	Logic Blue LED Signal.	GPIO_8	See section 2.5 for more info about IO functionality.
9	VCC_IO	I	Module I/O level voltage input		3.3 V IO voltage supply.
10	VCC	I	Module supply voltage input		3.0-3.6 V module voltage supply.
11	RSVD		Reserved for future use.		Do not connect.
12	GND		Ground		
13	ANT	I/O	Antenna Tx/Rx interface		50 Ω nominal characteristic impedance
14	GND		Ground		
15	RSVD		Reserved for future use.		Do not connect.
16	UART_DTR	O	UART Data Terminal Ready.	GPIO_16	The DTR signaling is not according to UART standard (see section 2.5.3).
17	UART_DSR	I	UART Data Set Ready.	GPIO_17	The DSR signaling is not according to UART standard (see section 2.5.3).
18	SWITCH_2	I	Connect on external signal / Enter bootloader.	GPIO_18	Active low. See section 2.5 for more info about IO functionality.
19	RESET_N	I	External system reset input.		Active low.
20	UART_RTS	O	UART request to send.	GPIO_20	Hardware flow control signal. Active low.
21	UART_CTS	I	UART clear to send.	GPIO_21	Hardware flow control signal. Active low.
22	UART_TXD	O	UART data output.	GPIO_22	
23	UART_RXD	I	UART data input.	GPIO_23	
24	RSVD		Reserved for future use.	GPIO_24	
25	RSVD		Reserved for future use.	GPIO_25	Boot strap pin (see section 2.3).
26	GND		Ground		
27	SYS_BOOT		Software download	GPIO_27	Pull low during startup for download software (see section 2.3).
28	RSVD		Reserved for future use.	GPIO_28	Do not connect.
29	RSVD		Reserved for future use.	GPIO_29	Do not connect.
30	GND		Ground		
31	RSVD		Reserved for future use.	GPIO_31	Do not connect.
32	RSVD		Reserved for future use.	GPIO_32	Boot strap pin (see section 2.3).
33	RSVD		Reserved for future use.		Do not connect.
34	RSVD		Reserved for future use.	GPI_34	Do not connect
35	RSVD		Reserved for future use.	GPIO_35	Do not connect.
36	RSVD		Reserved for future use.	GPIO_36	Boot strap pin (see section 2.3).

Table 6: NINA-B221/NINA-B222 pinout

4 Electrical specifications

⚠ Stressing the device above one or more of the ratings listed in the Absolute maximum rating section may cause permanent damage. These are stress ratings only. Operating the module at these or at any conditions other than those specified in the Operating conditions section of this document should be avoided. Exposure to absolute maximum rating conditions for extended periods may affect device reliability.

☞ Operating condition ranges define those limits within which the functionality of the device is guaranteed. Where application information is given, it is advisory only and does not form part of the specification.

4.1 Absolute maximum ratings

Symbol	Description	Condition	Min	Max	Unit
VCC/ VCC_IO	Module supply voltage	Input DC voltage at VCC and VCC_IO pins	-0.3	3.9	V
$I_{VCC\ MAX}$ + $I_{VCC_IO\ MAX}$	Absolute maximum power consumption			500	mA
DPV	Digital pin voltage	Input DC voltage at any digital I/O pin	-0.3	3.9	V
P_ANT	Maximum power at receiver	Input RF power at antenna pin		+10	dBm
Tstr	Storage temperature		-40	+85	°C

Table 7: Absolute maximum ratings

⚠ The product is not protected against overvoltage or reversed voltages. If necessary, voltage spikes exceeding the power supply voltage specification, given in table above, must be limited to values within the specified boundaries by using appropriate protection devices.

4.1.1 Maximum ESD ratings

Parameter	Min.	Typical	Max.	Unit	Remarks
ESD sensitivity			500	V	Human body model according to JEDEC JS001
			250	V	Charged device model according to JESD22-C101

Table 8: Maximum ESD ratings

⚠ NINA-B2 series modules are Electrostatic Sensitive Devices and require special precautions while handling. See section 8.4 for ESD handling instructions.

4.2 Operating conditions

⚠ Operation beyond the specified operating conditions is not recommended and extended exposure beyond them may affect device reliability.

☞ Unless otherwise specified, all operating condition specifications are at an ambient temperature of 25 °C and at a supply voltage of 3.3 V.

4.2.1 Operating temperature range

Parameter	Min	Max	Unit
Operating temperature	-40	+85	°C

Table 9: Temperature range

4.2.2 Supply/Power pins

Symbol	Parameter	Min	Typ	Max	Unit
VCC	Input supply voltage	3.0	3.3	3.6	V
VCC_IO	I/O reference voltage	3.0	3.3	3.6	V

Table 10: Input characteristics of voltage supply pins

4.2.3 RESET_N pin

Pin name	Parameter	Min	Typ	Max	Unit
RESET_N	Low-level input	0		0.3*VCC	V
	Internal pull-up resistance		100		kΩ
	Internal capacitance		10		nF
t_Startup	Startup time after release of reset		2.6		s

Table 11: RESET_N pin characteristics

4.2.4 Digital pins

Pin name	Parameter	Min	Typ	Max	Unit	Remarks
Any digital pin	Input characteristic: Low-level input	0		0.3*VCC_IO	V	
	Input characteristic: high-level input	0.7*VCC_IO		VCC_IO	V	
	Output characteristic: Low-level output	0		0.4	V	Normal drive strength
		0		0.4	V	High drive strength
	Output characteristic: High-level output	VCC_IO-0.4		VCC_IO	V	Normal drive strength
		VCC_IO-0.4		VCC_IO	V	High drive strength
	Pull-up/pull-down resistance		30		kΩ.	
Signals rerouted via the IO MUX	Output signal speed			20	MHz	
	Input signal speed			10	MHz	The GPIO-Matrix delays the input-signals by 2 cycles of the AHB-clock typical 80MHz -> 25 ns delay

Table 12: Digital pin characteristics

4.2.5 Current consumption

Typical current consumption (VCC+VCC_IO) of a NINA-B2 module is provided in Table 13.

Power mode	Activity	Typ	Max	Unit	Remarks
Bluetooth BR/EDR (BLE disabled)	Transmitting	147	250	mA	Throughput UART 1.25 Mbit/s.
	Receiving	108	250	mA	Throughput UART 1.25 Mbit/s.
	Bluetooth connected	102	220	mA	
	Inquiry	98	220	mA	
Bluetooth Low Energy	Transmitting (peripheral)	57	250	mA	Throughput 30 kbit/s
	Receiving (peripheral)	54	240	mA	Throughput 25 kbit/s
	Transmitting (central)	63	240	mA	Throughput 28 kbit/s
	Receiving (central)	47	240	mA	Throughput 16 kbit/s
	Connected listening (peripheral)	42	210	mA	
	Connected listening (central)	42	210	mA	
	BLE peripheral (advertising)	39	210	mA	
	BLE central	106	130	mA	Background scanning on
CPU idle mode	BLE disabled	36	130	mA	

Table 13: Current consumption during typical use cases

4.2.6 Bluetooth radio characteristics

V_{CC} = 3.3 V, T_{amb} = 25 °C

Parameter	Operation Mode	Specification / Typ	Unit
RF Frequency Range		2.400 – 2.4835	GHz
Supported Modes		Bluetooth v4.2+EDR	
Number of channels		79	
Modulation	1 Mbps	GFSK (BDR)	
	2 Mbps	π/4-DQPSK (EDR)	
	3 Mbps	8-DPSK (EDR)	
Conducted Transmit Power	1 Mbps	6 ± 1	dBm
	2/3 Mbps	8 ± 1	dBm
Conducted Receiver Sensitivity	1 Mbps	-88 ± 2	dBm
	2 Mbps	-86 ± 2	dBm
	3 Mbps	-83 ± 2	dBm

Table 14: Bluetooth radio characteristics

4.2.7 Bluetooth low energy characteristics

V_{CC} = 3.3 V, T_{amb} = 25 °C

Parameter	Specification / Typ	Unit
RF Frequency Range	2.400 – 2.4835	GHz
Supported Modes	Bluetooth v4.2	
Number of channels	40	
Modulation	GFSK	
Conducted Transmit Power	6 ± 1	dBm
Conducted Receiver Sensitivity	-88 ± 2	dBm

Table 15: Bluetooth low energy characteristics

5 Mechanical specifications

5.1 NINA-B221 Mechanical specification

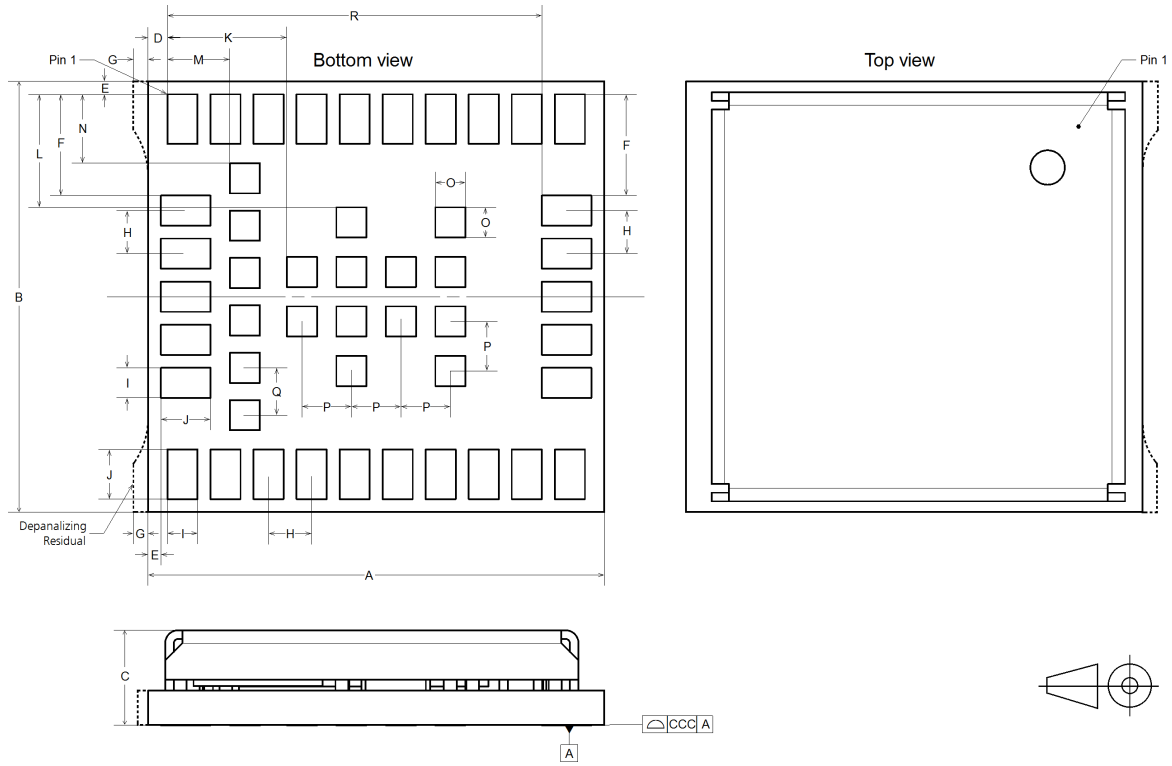

Figure 3: NINA-B221 mechanical outline

Parameter	Description	Typical		Tolerance	
A	Module PCB Length [mm]	10.6	(417.3 mil)	+0.20/-0.10	(+7.9/-3.9 mil)
B	Module PCB Width [mm]	10.0	(393.7 mil)	+0.20/-0.10	(+7.9/-3.9 mil)
C	Module Thickness [mm]	2.2	(86.6 mil)	+0.40/-0.20	(+15.8/-7.9 mil)
ccc	Seating Plane Coplanarity [mm]	0.10	(3.9 mil)	+0.02/-0.10	(+0.8/-3.9 mil)
D	Horizontal Edge to Lateral Pin No 1 Edge [mm]	0.45	(17.7 mil)	+0.10/-0.10	(+3.9/-3.9 mil)
E	Vertical and Horizontal Edge to Lateral Pin No 1 Edge	0.30	(11.8 mil)	+0.10/-0.10	(+3.9/-3.9 mil)
F	Vertical Pin No1 Edge to Lateral Pin Edge [mm]	2.35	(92.5 mil)	+0.05/-0.05	(+2.0/-2.0 mil)
G	Depanalizing Residual [mm]	0.10	(3.9 mil)	+0.25/-0.10	(+9.8/-3.9 mil)
H	Lateral and Antenna Row Pin to Pin Pitch [mm]	1.0	(39.4 mil)	+0.05/-0.05	(+2.0/-2.0 mil)
I	Lateral and Antenna Row Pin Width [mm]	0.70	(27.6 mil)	+0.05/-0.05	(+2.0/-2.0 mil)
J	Lateral and Antenna Row Pin Height [mm]	1.15	(45.3 mil)	+0.05/-0.05	(+2.0/-2.0 mil)
K	Horizontal Pin No1 Edge to Central Pin Edge [mm]	2.78	(109.4 mil)	+0.05/-0.05	(+2.0/-2.0 mil)
L	Vertical Pin No1 Edge to Central Pin Edge [mm]	2.63	(103.5 mil)	+0.05/-0.05	(+2.0/-2.0 mil)
M	Horizontal Pin No1 Edge to Inner Row Pin Edge [mm]	1.45	(57.1 mil)	+0.05/-0.05	(+2.0/-2.0 mil)
N	Vertical Pin No1 Edge to Inner Row Pin Edge [mm]	1.6	(63.0 mil)	+0.05/-0.05	(+2.0/-2.0 mil)
O	Central Pin and Inner Row Width and Height [mm]	0.70	(27.6 mil)	+0.05/-0.05	(+2.0/-2.0 mil)
P	Central Pin to Central Pin Pitch [mm]	1.15	(45.3 mil)	+0.05/-0.05	(+2.0/-2.0 mil)
Q	Inner Row Pin to Pin Pitch [mm]	1.1	(43.3 mil)	+0.05/-0.05	(+2.0/-2.0 mil)
R	Horizontal Pin No1 Edge to Antenna Row Pin Edge [mm]	8.7	(342.5 mil)	+0.05/-0.05	(+2.0/-2.0 mil)
	Module Weight [g]	<1.0			

Table 16: NINA-B221 mechanical outline data

5.2 NINA-B222 Mechanical specification

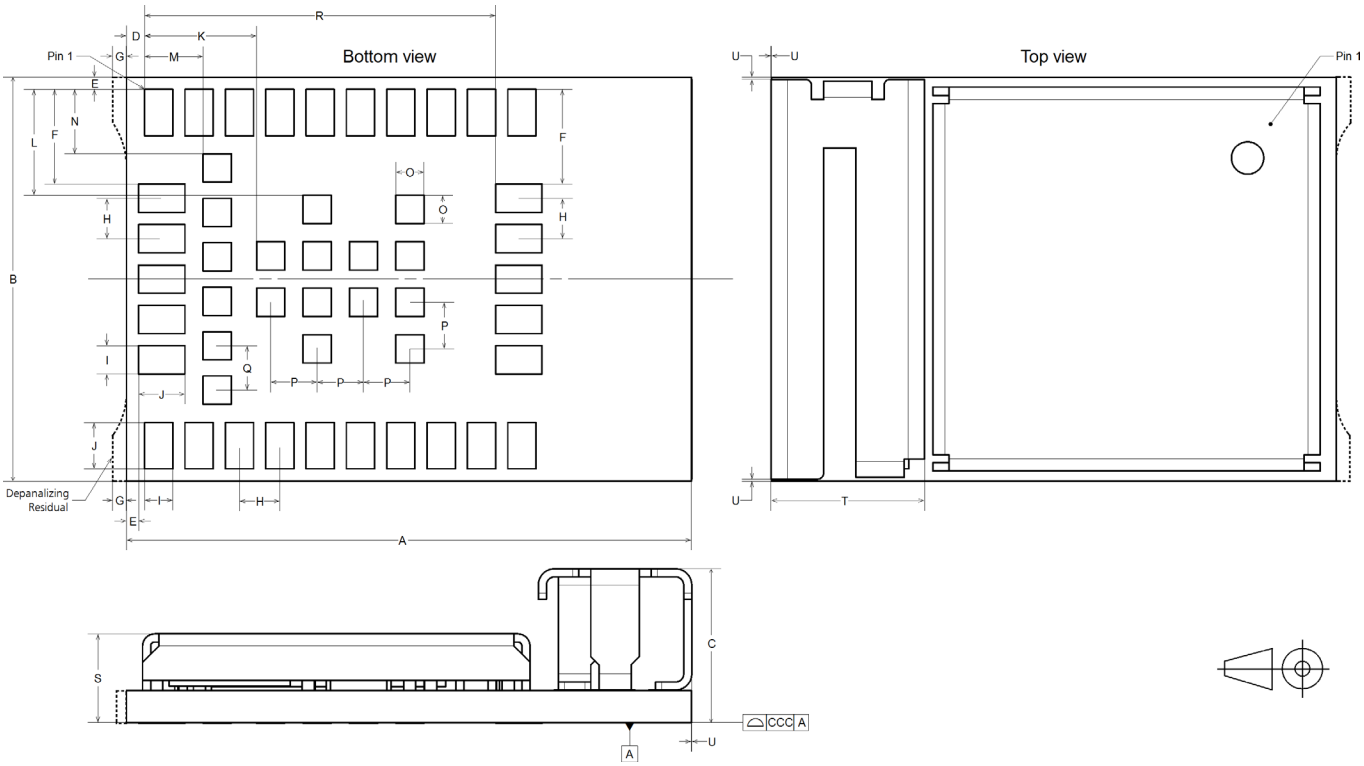

Figure 4: NINA-B222 mechanical outline

Parameter	Description	Typical		Tolerance	
A	Module PCB Length [mm]	14.0	(551.2 mil)	+0.20/-0.10	(+7.9/-3.9 mil)
B	Module PCB Width [mm]	10.0	(393.7 mil)	+0.20/-0.10	(+7.9/-3.9 mil)
C	Module Thickness [mm]	3.8	(149.6 mil)	+0.40/-0.20	(+15.8/-7.9
ccc	Seating Plane Coplanarity [mm]	0.10	(3.9 mil)	+0.02/-0.10	(+0.8/-3.9 mil)
D	Horizontal Edge to Lateral Pin No 1 Edge [mm]	0.45	(17.7 mil)	+0.10/-0.10	(+3.9/-3.9 mil)
E	Vertical and Horizontal Edge to Lateral Pin No 1 Edge	0.30	(11.8 mil)	+0.10/-0.10	(+3.9/-3.9 mil)
F	Vertical Pin No1 Edge to Lateral Pin Edge [mm]	2.35	(92.5 mil)	+0.05/-0.05	(+2.0/-2.0 mil)
G	Depanalizing Residual [mm]	0.10	(3.9 mil)	+0.25/-0.10	(+9.8/-3.9 mil)
H	Lateral and Antenna Row Pin to Pin Pitch [mm]	1.0	(39.4 mil)	+0.05/-0.05	(+2.0/-2.0 mil)
I	Lateral and Antenna Row Pin Width [mm]	0.70	(27.6 mil)	+0.05/-0.05	(+2.0/-2.0 mil)
J	Lateral and Antenna Row Pin Height [mm]	1.15	(45.3 mil)	+0.05/-0.05	(+2.0/-2.0 mil)
K	Horizontal Pin No1 Edge to Central Pin Edge [mm]	2.78	(109.4 mil)	+0.05/-0.05	(+2.0/-2.0 mil)
L	Vertical Pin No1 Edge to Central Pin Edge [mm]	2.63	(103.5 mil)	+0.05/-0.05	(+2.0/-2.0 mil)
M	Horizontal Pin No1 Edge to Inner Row Pin Edge [mm]	1.45	(57.1 mil)	+0.05/-0.05	(+2.0/-2.0 mil)
N	Vertical Pin No1 Edge to Inner Row Pin Edge [mm]	1.6	(63.0 mil)	+0.05/-0.05	(+2.0/-2.0 mil)
O	Central Pin and Inner Row Width and Height [mm]	0.70	(27.6 mil)	+0.05/-0.05	(+2.0/-2.0 mil)
P	Central Pin to Central Pin Pitch [mm]	1.15	(45.3 mil)	+0.05/-0.05	(+2.0/-2.0 mil)
Q	Inner Row Pin to Pin Pitch [mm]	1.1	(43.3 mil)	+0.05/-0.05	(+2.0/-2.0 mil)
R	Horizontal Pin No1 Edge to Antenna Row Pin Edge	8.7	(342.5 mil)	+0.05/-0.05	(+2.0/-2.0 mil)
S	PCB and Shield Cover Thickness [mm]	2.2	(86.6 mil)	+0.40/-0.20	(+15.8/-7.9
T	Module Antenna Width [mm]	3.8	(149.6 mil)	+0.20/-0.20	(+7.9/-7.9 mil)
U	Antenna overhang outside module outline on any side	0.0	(0.0 mil)	+0.60	(+23.6 mil)
	Module Weight [g]	<1.0			

Table 17: NINA-B222 mechanical outline data

6 Qualification and approvals

6.1 Country approvals

The NINA-B2 module series is certified for use in the following countries/regions:

- Europe (RED)
- USA (FCC)
- Canada (IC)
- Japan (MIC)
- Taiwan (NCC)
- South Korea (KCC)

See the following sections for additional information.

6.2 European Union regulatory compliance

6.2.1 Radio Equipment Directive (RED) 2014/53/EU

The NINA-B2 series modules will comply with the essential requirements and other relevant provisions of Radio Equipment Directive (RED) 2014/53/EU.

6.2.2 Compliance with the RoHS directive

The NINA-B2 series modules comply with the "Directive 2011/65/EU of the European Parliament and the Council on the Restriction of Use of certain Hazardous Substances in Electrical and Electronic Equipment" (RoHS).

6.3 FCC/IC Compliance

This device complies with Part 15 of the FCC Rules and with Industry Canada license-exempt RSS standard(s).

⚠ Any changes or modifications NOT explicitly APPROVED by u-blox AG may cause the module to not comply with the FCC rules part 15 thus void the user's authority to operate the equipment.

6.3.1 FCC Compliance

The NINA-B2 modules are for OEM integrations only. The end product will be professionally installed in such manner that only the authorized antennas can be used.

For NINA-B221, an external antenna connector (U.FL. connector) reference design is available and must be followed to comply with the NINA-B2 FCC/IC modular approval. See the NINA-B2 series System Integration Manual [1] for detailed information).

6.3.2 FCC statement

This device complies with Part 15 of the FCC Rules. Operation is subject to the following two conditions:

1. This device may not cause harmful interference, and
2. This device must accept any interference received, including interference that may cause undesired operation.

   This equipment has been tested and found to comply with the limits for a Class B digital device, pursuant to Part 15 of the FCC Rules. These limits are designed to provide reasonable protection against harmful interference in a residential installation. This equipment generates, uses and can radiate radio frequency energy and, if not installed and used in accordance with the

instructions, may cause harmful interference to radio communications. However, there is no guarantee that the interference will not occur in a particular installation. If this equipment does cause harmful interference to radio or television reception, which can be determined by turning the equipment off and on, the user is encouraged to try to correct the interference by one or more of the following measures:

- Reorient or relocate the receiving antenna
- Increase the separation between the equipment and receiver
- Connect the equipment into an outlet on a circuit different from that to which the receiver is connected.
- Consult the dealer or an experienced radio/TV technician for help.

6.3.3 RF-exposure statement

6.3.3.1 IC Compliance

This equipment complies with the requirements of IC RSS-102 issue 5 radiation exposure limits set forth for an uncontrolled environment.

Having a separation distance of minimum 30 mm between the user and/or bystander and the antenna and /or radiating element ensures that the output power (e.i.r.p.) of NINA-B221 and NINA-B222 is below the SAR evaluation Exemption limits defined in RSS-102 issue 5.

6.3.3.2 FCC Compliance

This device complies with the FCC radiation exposure limits set forth for an uncontrolled environment.

Having a separation distance of minimum 25 mm between the user and/or bystander and the antenna and /or radiating element ensures that maximum output power of NINA-B221 and NINA-B222 is below the SAR test exclusion limits presented in KDB 447498 D01v06.

6.3.4 End-product user manual instructions

6.3.4.1 IC Compliance

☞ User manuals for license-exempt radio apparatus shall contain the following text, or an equivalent notice that shall be displayed in a conspicuous location, either in the user manual or on the device, or both:
This device complies with Industry Canada's license-exempt RSSs. Operation is subject to the following two conditions:

(1) This device may not cause interference; and
(2) This device must accept any interference, including interference that may cause undesired operation of the device.

Under Industry Canada regulations, this radio transmitter can only operate using an antenna of a type and maximum (or lesser) gain approved for the transmitter by Industry Canada. To reduce potential radio interference to other users, the antenna type and its gain should be chosen in such a way that the equivalent isotropically radiated power (e.i.r.p.) is not more than that is necessary for successful communication.

☞ Le manuel d'utilisation des appareils radio exempts de licence doit contenir l'énoncé qui suit, ou l'équivalent, à un endroit bien en vue dans le manuel d'utilisation ou sur l'appareil, ou encore aux deux endroits.
Le présent appareil est conforme aux CNR d'Industrie Canada applicables aux appareils radio exempts de licence. L'exploitation est autorisée aux deux conditions suivantes :
(1) l'appareil ne doit pas produire de brouillage;

(2) l'utilisateur de l'appareil doit accepter tout brouillage radioélectrique subi, même si le brouillage est susceptible d'en compromettre le fonctionnement.

Conformément aux réglementations d'Industry Canada, cet émetteur radio ne peut fonctionner qu'à l'aide d'une antenne dont le type et le gain maximal (ou minimal) ont été approuvés pour cet émetteur par Industry Canada. Pour réduire le risque d'interférences avec d'autres utilisateurs, il faut choisir le type d'antenne et son gain de telle sorte que la puissance isotrope rayonnée équivalente (p.i.r.e) ne soit pas supérieure à celle requise pour obtenir une communication satisfaisante.

6.3.5 End-product labeling requirements

6.3.5.1 IC Compliance

The host product shall be properly labelled to identify the modules within the host product.
The Innovation, Science and Economic Development Canada certification label of a module shall be clearly visible at all times when installed in the host product; otherwise, the host product must be labelled to display the Innovation, Science and Economic Development Canada certification number for the module, preceded by the word "Contains" or similar wording expressing the same meaning, as shown in Figure 5.

Le produit hôte devra être correctement étiqueté, de façon à permettre l'identification des modules qui s'y trouvent.

L'étiquette d'homologation d'un module d'Innovation, Sciences et Développement économique Canada devra être posée sur le produit hôte à un endroit bien en vue, en tout temps. En l'absence d'étiquette, le produit hôte doit porter une étiquette sur laquelle figure le numéro d'homologation du module d'Innovation, Sciences et Développement économique Canada, précédé du mot « contient », ou d'une formulation similaire allant dans le même sens et qui va comme suit:

This device contains FCC ID: XPYNINAB22 IC: 8595A-NINAB22

Figure 5 Example of an end product label

6.3.5.2 FCC Compliance

For an end product that uses the NINA-B221 or NINA-B222 modules, there must be a label containing, at least, the information shown in Figure 5:

The label must be affixed on an exterior surface of the end product such that it will be visible upon inspection in compliance with the modular approval guidelines developed by the FCC.

☞ In accordance with 47 CFR § 15.19, the end product shall bear the following statement in a conspicuous location on the device:

"This device complies with Part 15 of the FCC Rules. Operation is subject to the following two conditions;

(1) this device may not cause harmful interference, and
(2) this device must accept any interference received, including interference that may cause undesired operation."

When the device is so small or for such use that it is not practicable to place the statement above on it, the information shall be placed in a prominent location in the instruction manual or pamphlet

supplied to the user or, alternatively, shall be placed on the container in which the device is marketed.

In case, where the final product will be installed in locations where the end-user is not able to see the FCC ID and/or this statement, the FCC ID and the statement shall also be included in the end product manual.

Model	FCC ID	IC Certification Number
NINA-B221	XPYNINAB22	8595A-NINAB22
NINA-B222	XPYNINAB22	8595A-NINAB22

Table 18: FCC and IC IDs for the NINA-B2 series modules

6.3.6 End-product compliance

6.3.6.1 General requirements

- Any changes to hardware, hosts or co-location configuration may require new radiated emission and SAR evaluation and/or testing.
- The regulatory compliance of NINA-B221 and NINA-B222 does not exempt the end product from being evaluated against applicable regulatory demands; for example, FCC Part 15B criteria for unintentional radiators.
- Only authorized antenna(s) may be used.
- Any notification to the end user about how to install or remove the integrated radio module is NOT allowed.

6.3.6.2 Co-location (simultaneous transmission)

If the module is to be co-located with another transmitter, additional measurements for simultaneous transmission are required.

6.4 Japan radio equipment compliance

R **204-810001**

Figure 6: Giteki mark, R and the NINA-B221/ NINA-B222 MIC certification number

For information about compliance of the NINA-B221/ NINA-B222 modules with the Giteki certification, see the NINA-B2 Series System Integration Manual [1].

6.5 NCC Taiwan compliance

6.5.1 Taiwan NCC Warning Statement

- 經型式認證合格之低功率射頻電機，非經許可，公司、商號或使用者均不得擅自變更頻率、 加大功率或變更原設計之特性及功能。
- 低功率射頻電機之使用不得影響飛航安全及干擾合法通信；經發現有干擾現象時，應立即停用，並改善至無干擾時方得繼續使用。前項合法通信，指依電信法規定作業之無線電通信。低功率射頻電機須忍受合法通信或工業、科學及醫療用電波輻射性電機設備之干擾。

Statement translation:

- Without permission granted by the NCC, any company, enterprise, or user is not allowed to change frequency, enhance transmitting power or alter original characteristic as well as performance to an approved low power radio-frequency devices.

- The low power radio-frequency devices shall not influence aircraft security and interfere legal communications; If found, the user shall cease operating immediately until no interference is achieved. The said legal communications means radio communications is operated in compliance with the Telecommunications Act. The low power radio-frequency devices must be susceptible with the interference from legal communications or ISM radio wave radiated devices.

6.5.2 NINA-B221 labeling requirements for end product

When a product integrated with an NINA-B221 module is placed on the Taiwan market, the product must be affixed with a label marking as shown below. The label can use wording such as the following:

Contains Transmitter Module

□含發射器模組:: CCAJ18LP0B41T0

or any similar wording that expresses the same meaning may be used. The marking must be visible for inspection.

6.5.3 NINA-B222 labeling requirements for end product

When a product integrated with an NINA-B222 module is placed on the Taiwan market, the product must be affixed with a label marking as shown below. The label can use wording such as the following:

Contains Transmitter Module

□含發射器模組:: CCAJ18LP0B51T3

or any similar wording that expresses the same meaning may be used. The marking must be visible for inspection.

6.6 KCC South Korea compliance

The NINA-B2 series modules are certified by the Korea Communications Commission (KCC).

When a product containing a NINA-B2 module is placed on the South Korean market, the product must be affixed with a label or marking containing the KCC logo and certification number as shown in the following figure. NINA-B221 and NINA-B222 has the same certification number as the NINA-W151 and NINA-W152 modules. This information must also be included in the product user manuals.

R-C-ULX-NINA-W151

The height of the KCC logo must be at least 5 mm.

6.7 Safety compliance

In order to fulfill the safety standard EN 60950-1, the NINA-B2 series modules must be supplied with a Class-2 Limited Power Source.

6.8 Bluetooth qualification information

The NINA-B221/NINA-B222 modules have been qualified as a controller subsystem according to the Bluetooth 4.2 specification.

Product type	QD ID	Listing Date
Controller Subsystem	107058	14-Mar-2018
Host Subsystem	110883	30-Apr-2018

Table 19: NINA-B221/NINA-B222 Bluetooth QD ID

For information on how to list and declare your product, see the NINA-B2 Series System Integration Manual [1].

7 Antennas

This chapter gives an overview of the different external antennas that can be used together with the module.

⚠ This radio transmitter IC: 8595A-NINAB22 has been approved by Industry Canada to operate with the antenna types listed below with the maximum permissible gain and required antenna impedance for each antenna type indicated. Antenna types not included in this list, having a gain greater than the maximum gain indicated for that type, are strictly prohibited for use with this device.

⚠ Cet émetteur radio IC: 8595A-NINAB22 été approuvé par Industry Canada pour fonctionner avec les types d'antenne énumérés ci-dessous avec le gain maximum autorisé et l'impédance nécessaire pour chaque type d'antenne indiqué. Les types d'antenne ne figurant pas dans cette liste et ayant un gain supérieur au gain maximum indiqué pour ce type-là sont strictement interdits d'utilisation avec cet appareil.

For each antenna, the "Approvals" field defines in which test reports the antenna is included. Definitions of the «Approvals» field are:

- FCC - The antenna is included in the FCC test reports and thus approved for use in countries that accept the FCC radio approvals, primarily US.
- IC - The antenna is included in the IC (Industrie Canada) test reports and thus approved for use in countries that accept the IC radio approvals, primarily Canada.
- RED - The antenna is included in the ETSI test reports and thus approved for use in countries that accept the Radio Equipment Directive, primarily the European countries.
- MIC - The antenna is included in the Japanese government affiliated MIC test reports and thus approved for use in the Japanese market.
- NCC - The antenna is included in the Taiwan NCC test reports and thus approved for use in Taiwan.
- KCC - The antenna is included in the Korea KCC test reports and thus approved for use in Korea.
- ANATEL – The antenna is included in the Brazil ANATEL test reports and thus approved for use in Brazil.
- ICASA – The antenna is included in the South Africa ICASA test reports and thus approved for use in South Africa.

In general, antennas with SMD connection, Reverse Polarity SMA connector or U.FL connector are included in FCC, IC, RED, NCC and MIC radio tests. The antennas with SMA connector are included in RED, NCC and MIC radio tests but not in the FCC or IC due to FCC/IC regulations.

The external antennas are connected to the board through U.FL connectors. Some antennas are connected directly to the U.FL connector of the board while some are connected using an SMA or reversed polarity SMA connector through a short U.FL to SMA or reversed polarity SMA adapter cable.

7.1 Antenna accessories

Name	**U.FL to SMA adapter cable**
Connector	U.FL and SMA jack (outer thread and pin receptacle)
Impedance	50 Ω
Minimum cable loss	0.5 dB, The cable loss must be above the minimum cable loss to meet the regulatory requirements. Minimum cable length 100 mm.
Comment	The SMA connector can be mounted in a panel. See NINA-B2 series System Integration Manual [1] for information how to integrate the U.FL connector.
Approval	RED, MIC, NCC and KCC

Name	**U.FL to Reverse Polarity SMA adapter cable**
Connector	U.FL and Reverse Polarity SMA jack (outer thread and pin)
Impedance	50 Ω
Minimum cable loss	0.5 dB, The cable loss must be above the minimum cable loss to meet the regulatory requirements. Minimum cable length 100 mm.
Comment	The Reverse Polarity SMA connector can be mounted in a panel. See NINA-B2 series System Integration Manual [1] for information how to integrate the U.FL connector. It is required to followed this reference design to comply with the NINA-B2 FCC/IC modular approvals.
Approval	FCC, IC, RED, MIC, NCC and KCC

7.2 Approved antennas

7.2.1 Single band antennas

NINA-B222	
Manufacturer	ProAnt
Gain	+3 dBi
Impedance	50 Ω
Size (HxWxL)	3.0 x 3.8 x 9.9 mm
Type	PIFA
Comment	SMD PIFA antenna on NINA-B222. Should not be mounted inside a metal enclosure, see section for more info 2.4.1.
Approval	FCC, IC, RED, MIC, NCC and KCC

GW.26.0111

Manufacturer	Taoglas
Polarization	Vertical
Gain	+2.0 dBi
Impedance	50 Ω
Size	Ø 7.9 x 30.0 mm
Type	Monopole
Connector	SMA (M) .
Comment	To be mounted on the U.FL to SMA adapter cable.
Approval	FCC, IC, RED, MIC, NCC and KCC

ANT-2.4-CW-RH-RPS

Manufacturer	Linx
Polarization	Vertical
Gain	-1.0 dBi
Impedance	50 Ω
Size	Ø 7.4 x 27.0 mm
Type	Monopole
Connector	Reverse Polarity SMA plug (inner thread and pin receptacle).
Comment	To be mounted on the U.FL to Reverse Polarity SMA adapter cable. An SMA version antenna is also available but not recommended for use (ANT-2.4-CW-RH-SMA).
Approval	FCC, IC, RED, MIC, NCC and KCC

Ex-IT 2400 RP-SMA 28-001

Manufacturer	ProAnt
Polarization	Vertical
Gain	+3.0 dBi
Impedance	50 Ω
Size	Ø 12.0 x 28.0 mm
Type	Monopole
Connector	Reverse Polarity SMA plug (inner thread and pin receptacle).
Comment	This antenna requires to be mounted on a metal ground plane for best performance. To be mounted on the U.FL to Reverse Polarity SMA adapter cable. An SMA version antenna is also available but not recommended for use (Ex-IT 2400 SMA 28-001).
Approval	FCC, IC, RED, MIC, NCC and KCC

Ex-IT 2400 MHF 28

Manufacturer	ProAnt
Polarization	Vertical
Gain	+2.0 dBi
Impedance	50 Ω
Size	Ø 12.0 x 28.0 mm
Type	Monopole
Cable length	100 mm
Connector	U.FL. connector
Comment	This antenna requires to be mounted on a metal ground plane for best performance. To be mounted on a U.FL connector. See NINA-B2 series System Integration Manual [1] for information how to integrate the U.FL connector. It is required to followed this reference design to comply with the NINA–B2 FCC/IC modular approvals.
Approval	FCC, IC, RED, MIC, NCC and KCC

Ex-IT 2400 RP-SMA 70-002

Manufacturer	ProAnt
Polarization	Vertical
Gain	+3.0 dBi
Impedance	50 Ω
Size	Ø 10 x 83 mm
Type	Monopole
Connector	Reverse Polarity SMA plug (inner thread and pin receptacle)
Comment	To be mounted on the U.FL to Reverse Polarity SMA adapter cable. An SMA version antenna is also available but not recommended for use (Ex-IT 2400 SMA 70-002).
Approval	FCC, IC, RED, MIC, NCC and KCC

Ex-IT 2400 MHF 70-001

Manufacturer	ProAnt
Polarization	Vertical
Gain	+3.0 dBi
Impedance	50 Ω
Size	Ø 9.4 x 70.5 mm
Type	Monopole
Cable length	100 mm
Connector	U.FL. connector
Comment	To be mounted on a U.FL connector. See NINA-B2 series System Integration Manual [1] for information how to integrate the U.FL connector. It is required to followed this reference design to comply with the NINA-B2 FCC/IC modular approvals.
Approval	FCC, IC, RED, MIC, NCC and KCC

InSide-2400

Manufacturer	ProAnt
Gain	+3.0 dBi
Impedance	50 Ω
Size	27 x 12 mm (triangular)
Type	Patch
Cable length	100 mm
Connector	U.FL. connector
Comment	Should be attached to a plastic enclosure or part for best performance. To be mounted on a U.FL connector. See NINA-B2 series System Integration Manual [1] for information how to integrate the U.FL connector. It is required to followed this reference design to comply with the NINA-B2 FCC/IC modular approvals.
Approval	FCC, IC, RED, MIC, NCC and KCC

FlatWhip-2400

Manufacturer	ProAnt
Gain	+3.0 dBi
Impedance	50 Ω
Size	Ø 50.0 x 30.0 mm
Type	Monopole
Connector	SMA plug (inner thread and pin)
Comment	To be mounted on the U.FL to SMA adapter cable.
Approval	RED, MIC, NCC and KCC

Outside-2400

Manufacturer	ProAnt
Gain	+3.0 dBi
Impedance	50 Ω
Size	36.0 x 18.0 x 16.0 mm
Type	Patch
Cable length	70 mm
Connector	U.FL. connector
Comment	To be mounted on a U.FL connector. See NINA-B2 series System Integration Manual [1] for information how to integrate the U.FL connector. It is required to followed this reference design to comply with the NINA-B2 FCC/IC modular approvals.
Approval	FCC, IC, RED, MIC, NCC and KCC

7.2.2 Dual-band antennas

InSide-WLAN	
Manufacturer	ProAnt
Gain	+3.0 dBi
Impedance	50 Ω
Size	27 x 12 mm (triangular)
Type	Patch
Cable length	100 mm
Connector	U.FL. connector
Comment	Should be attached to a plastic enclosure or part for best performance. Dual-band (2.4 GHz / 5 GHz) antenna to be mounted on a U.FL connector. See NINA-B2 series System Integration Manual [1] for information how to integrate the U.FL connector. It is required to followed this reference design to comply with the NINA-B2 FCC/IC modular approvals.
Approval	FCC, IC, RED, MIC, NCC and KCC

InSide-WLAN Square	
Manufacturer	ProAnt
Gain	+3.0 dBi
Impedance	50 Ω
Size	24x22x1 mm with mounting hole
Type	Patch
Cable length	100 mm
Connector	U.FL. connector
Comment	Should be attached to a plastic enclosure or part for best performance. Dual-band (2.4 GHz / 5 GHz) antenna to be mounted on a U.FL connector. See NINA-B2 series System Integration Manual [1] for information on how to integrate the U.FL connector. It is required to followed this reference design to comply with the NINA-B2 FCC/IC modular approvals.
Approval	FCC, IC, RED, MIC, NCC and KCC

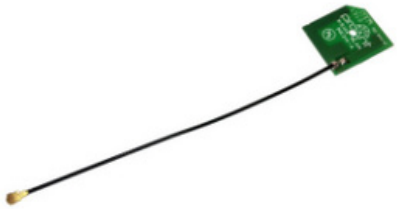

Ex-IT WLAN RPSMA	
Manufacturer	ProAnt
Type	½ wave dipole dual-band antenna
Polarization	Vertical
Gain	+3 dBi
Impedance	50 Ω
Size	107 mm (Straight)
Type	Monopole
Connector	Reverse Polarity SMA plug (inner thread and pin receptacle)
Comment	To be mounted on the U.FL to Reverse Polarity SMA adapter cable.
Approval	FCC, IC, RED, MIC, NCC and KCC

8 Product handling

8.1 Packaging

⚠ The NINA-B2 series modules are in development status as mentioned in the table on page 2. Hence, the information in this section will be applicable only when the module is fully tested and approved in the Initial Production stage.

8.1.1 Reels

The NINA-B2 series modules are delivered as hermetically sealed, reeled tapes to enable efficient production, production lot set-up and tear-down. For more information about packaging, see the u-blox Package Information Guide [2].

NINA-B2 modules are deliverable in quantities of 500 pieces on a reel. The reel types for the NINA-B2 modules are provided in Table 20 and detailed information about the reel types are described in u-blox Package Information Guide [2].

Model	Reel Type
NINA-B221	B
NINA-B222	A

Table 20: Reel types for the different models of NINA-B2 series

8.1.2 Tapes

Figure 7 and Figure 8 shows the position and orientation of the NINA-B2 modules as they are delivered on tape. The dimensions of the tapes are specified in Figure 9 and Figure 10.

Figure 7: Orientation of NINA-B221 module on tape

Figure 8: Orientation of NINA-B222 module on tape

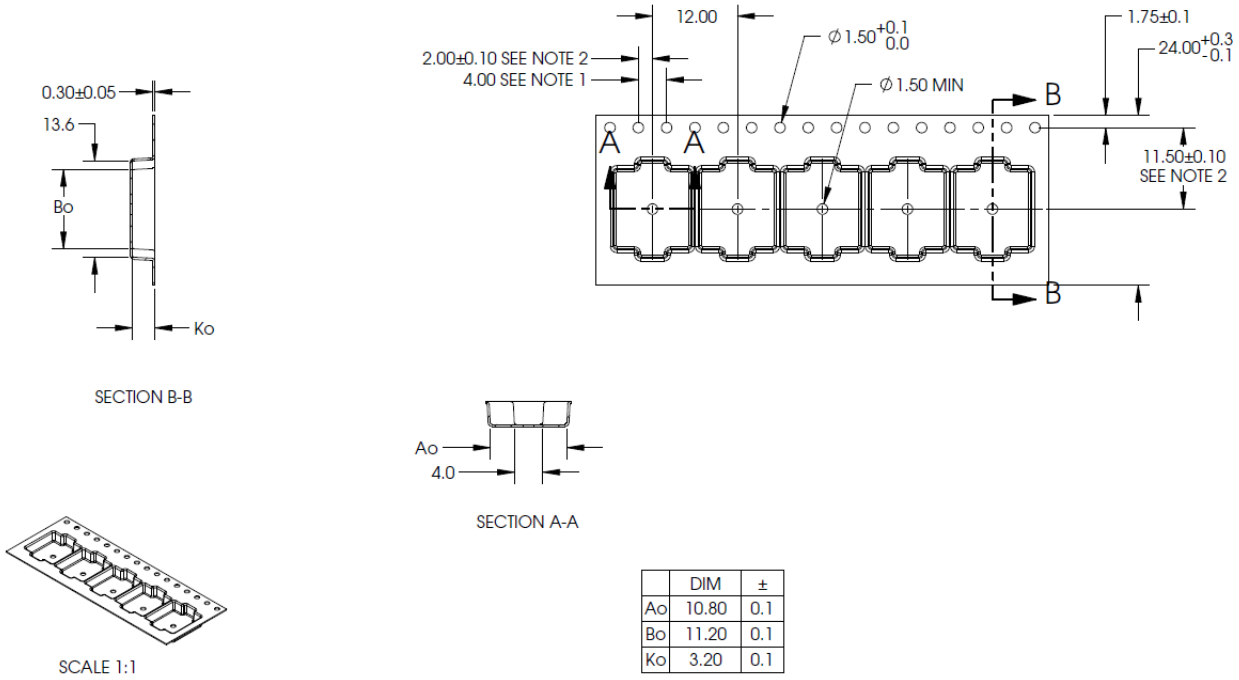

	DIM	±
Ao	10.80	0.1
Bo	11.20	0.1
Ko	3.20	0.1

NOTES:
1. 10 SPROCKET HOLE PITCH CUMULATIVE TOLERANCE ±0.2
2. POCKET POSITION RELATIVE TO SPROCKET HOLE MEASURED AS TRUE POSITION OF POCKET, NOT POCKET HOLE.
3. Ao AND Bo ARE MEASURED ON A PLANE AT A DISTANCE "R" ABOVE THE BOTTOM OF THE POCKET.

Figure 9: NINA-B221 tape dimension

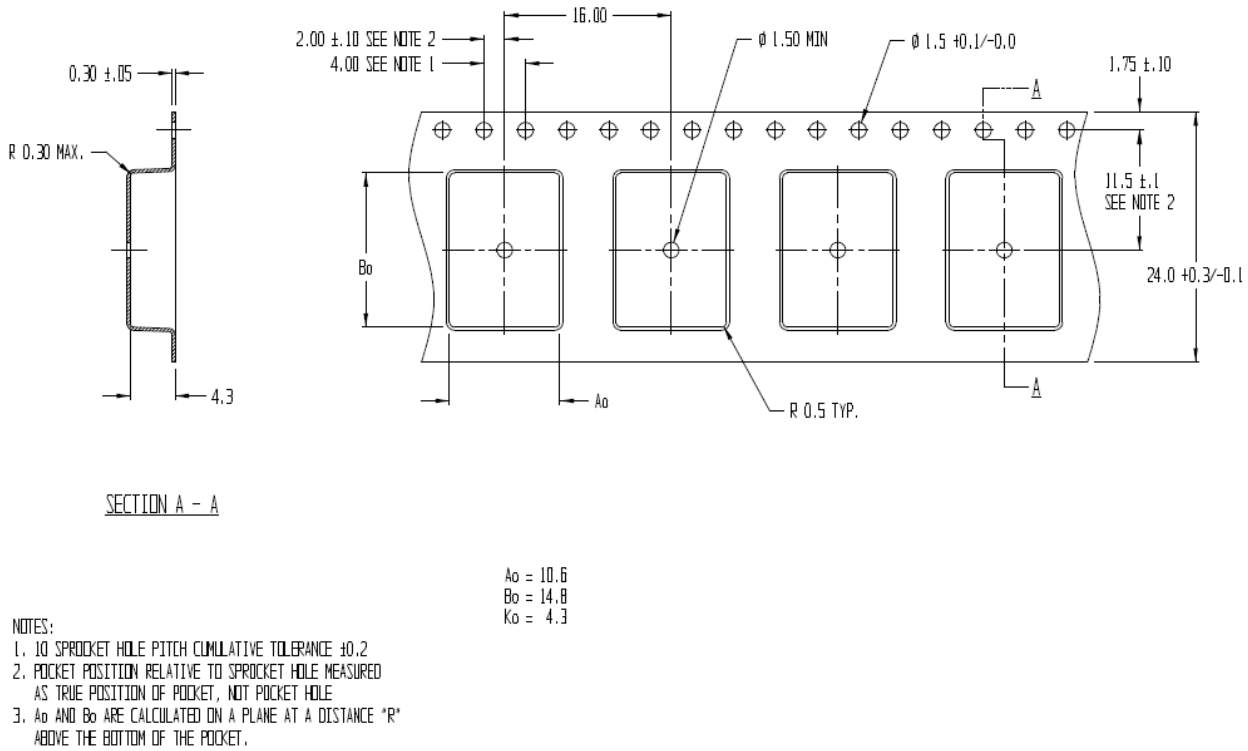

Figure 10: NINA-B222 tape dimension

8.2 Moisture sensitivity levels

⚠ The NINA-B2 series modules are Moisture Sensitive Devices (MSD) in accordance with the IPC/JEDEC specification.

The Moisture Sensitivity Level (MSL) relates to the required packaging and handling precautions. The NINA-B2 series modules are rated at MSL level 4. For more information regarding moisture sensitivity levels, labeling and storage, see the u-blox Package Information Guide [2].

☞ For MSL standards, see IPC/JEDEC J-STD-020, which can be downloaded from www.jedec.org.

8.3 Reflow soldering

Reflow profiles are to be selected according to u-blox recommendations. See NINA-B2 series System Integration Manual [1] for more information.

⚠ Failure to observe these recommendations can result in severe damage to the device.

8.4 ESD precautions

⚠ The NINA-B2 series modules contain highly sensitive electronic circuitry and are Electrostatic Sensitive Devices (ESD). Handling the NINA-B2 series modules without proper ESD protection may destroy or damage them permanently.

The NINA-B2 series modules are electrostatic sensitive devices (ESD) and require special ESD precautions typically applied to ESD sensitive components. Section 4.1.1 provides the maximum ESD ratings of the NINA-B2 series modules.

Proper ESD handling and packaging procedures must be applied throughout the processing, handling and operation of any application that incorporates the NINA-B2 series module. The ESD precautions should be implemented on the application board where the module is mounted as described in the NINA-B2 series System Integration Manual [1].

⚠ Failure to observe these recommendations can result in severe damage to the device.

9 Labeling and ordering information

9.1 Product labeling

The labels (7.5x7.5mm) of the NINA-B2 series modules include important product information as described in this section.

Figure 8 illustrates the label of all the NINA-B2 series modules, which includes product type number and revision, production date, Data Matrix with unique serial number (MAC address) and the u-blox logo.

Figure 11: Location of product type number on the NINA-B2 series module label

Reference	Description
1	Date of unit production encoded YY/WW (year, week)
2	Major and minor product version info
3	Product model name (NINA-B221 or NINA-B222)
4	Data Matrix with unique serial number of 19 alphanumeric symbols. The first 3 symbols represent a unique module type number. The next 12 symbols represent the unique hexadecimal Bluetooth address of the module AABBCCDDEEFF, and the last 4 symbols represent the hardware and software version encoded HHFF. See section 1.8 for more information about addresses.
5	u-blox logo. The red dot is also indicating pin no 1.

Table 21: NINA-B2 series label description

9.2 Explanation of codes

Three different product code formats are used. The **Product Name** is used in documentation such as this data sheet and identifies all u-blox products, independent of packaging and quality grade. The **Ordering Code** includes options and quality, while the **Type Number** includes the hardware and software versions. Table 22 below details these three different formats:

Format	Structure
Product Name	PPPP-TGVV
Ordering Code	PPPP -TGVV-TTQ
Type Number	PPPP -TGVV-TTQ-XX

Table 22: Product code formats

Table 23 explains the parts of the product code.

Code	Meaning	Example
PPPP	Form factor	NINA
TG	Platform (Technology and Generation) T – Dominant technology, For example, W: Wi-Fi, B: Bluetooth G - Generation	B2: Bluetooth Generation 2
VV	Variant based on the same platform; range [00…99]	21: u-blox connectivity software product with antenna pin
TT	Major Product Version	00: first revision
Q	Quality grade A: Automotive B: Professional C: Standard	B: professional grade
XX	Minor product version (not relevant for certification)	Default value is 00

Table 23: Part identification code

9.3 Ordering information

Ordering Code	Product
NINA-B221-00B	Bluetooth dual-mode module with antenna pin. With u-blox connectivity software including secure boot.
NINA-B222-00B	Bluetooth dual-mode module module with internal onboard antenna. With u-blox connectivity software including secure boot.

Table 24: Product ordering codes

Appendix

A Glossary

Abbreviation	Definition
ADC	Analog to Digital Converter
BR	Basic Rate
BDR	Basic Data Rate
BLE	Bluetooth Low Energy
BPF	Band Pass Filter
BT	Bluetooth
CTS	Clear To Send
DAC	Digital to Analog Converter
DC	Direct Current
DSR	Data Set Ready
DTR	Data Terminal Ready
EDR	Enhanced Data Rate
ESD	Electro Static Discharge
FCC	Federal Communications Commission
GND	Ground
GPIO	General Purpose Input/Output
I	Input (means that this is an input port of the module)
I^2C	Inter-Integrated Circuit
IC	Industry Canada
IEEE	Institute of Electrical and Electronics Engineers
IoT	Internet of Things
LPO	Low Power Oscillator
MCU	Micro Controller Unit
MDIO	Management Data Input / Output
MII	Media-Independent Interface
MRD	Market Requirement Document
MSD	Moisture Sensitive Device
N/A	Not Applicable
O	Output (means that this is an output port of the module)
PCN	Product Change Notification
PD	Pull-Down
PU	Pull-Up
QSPI	Quad Serial Peripheral Interface
RTS	Request To Send
RXD	Receive Data
SDIO	Secure Digital Input Output
SDK	Software Development Kit
SPI	Serial Peripheral Interface
TXD	Transmit Data
UART	Universal Asynchronous Receiver/Transmitter

Table 25: Explanation of the abbreviations and terms used

Related documents

[1] NINA-B2 series System Integration Manual, UBX-18011096
[2] u-blox Package Information Guide, document number UBX-14001652
[3] u-blox Short Range AT Commands Manual, document number UBX-14044127
[4] NINA-B2 series Product Summary, UBX-17062096

☞ For regular updates to u-blox documentation and to receive product change notifications, register on our homepage (www.u-blox.com).

Revision history

Revision	Date	Name	Comments
R01	16-Mar-2018	mwej, kgom	Initial release.
R02	6-Jul-2018	mwej, kgom	Updated the software version to version 1.0.0 and modified the corresponding content status to Advance Information. Modified the values for Bluetooth output power (section 0). Removed "pending" status for the following country approvals in section 6 - USA (FCC), Canada (IC) and Japan (MIC).
R03	14-Dec-2018	mwej	Updated label description (Table 21). Removed LPO functionality. Updated RF characteristics and current consumption in chapter 0.

Contact

For complete contact information, visit us at www.u-blox.com.

u-blox Offices

North, Central and South America

u-blox America, Inc.

Phone: +1 703 483 3180
E-mail: info_us@u-blox.com

Regional Office West Coast:

Phone: +1 408 573 3640
E-mail: info_us@u-blox.com

Technical Support:

Phone: +1 703 483 3185
E-mail: support@u-blox.com

Headquarters
Europe, Middle East, Africa

u-blox AG

Phone: +41 44 722 74 44
E-mail: info@u-blox.com
Support: support@u-blox.com

Asia, Australia, Pacific

u-blox Singapore Pte. Ltd.

Phone: +65 6734 3811
E-mail: info_ap@u-blox.com
Support: support_ap@u-blox.com

Regional Office Australia:

Phone: +61 2 8448 2016
E-mail: info_anz@u-blox.com
Support: support_ap@u-blox.com

Regional Office China (Beijing):

Phone: +86 10 68 133 545
E-mail: info_cn@u-blox.com
Support: support_cn@u-blox.com

Regional Office China (Chongqing):

Phone: +86 23 6815 1588
E-mail: info_cn@u-blox.com
Support: support_cn@u-blox.com

Regional Office China (Shanghai):

Phone: +86 21 6090 4832
E-mail: info_cn@u-blox.com
Support: support_cn@u-blox.com

Regional Office China (Shenzhen):

Phone: +86 755 8627 1083
E-mail: info_cn@u-blox.com
Support: support_cn@u-blox.com

Regional Office India:

Phone: +91 80 405 092 00
E-mail: info_in@u-blox.com
Support: support_in@u-blox.com

Regional Office Japan (Osaka):

Phone: +81 6 6941 3660
E-mail: info_jp@u-blox.com
Support: support_jp@u-blox.com

Regional Office Japan (Tokyo):

Phone: +81 3 5775 3850
E-mail: info_jp@u-blox.com
Support: support_jp@u-blox.com

Regional Office Korea:

Phone: +82 2 542 0861
E-mail: info_kr@u-blox.com
Support: support_kr@u-blox.com

Regional Office Taiwan:

Phone: +886 2 2657 1090
E-mail: info_tw@u-blox.com
Support: support_tw@u-blox.com